350 SERIES

KOSO

350W & 350K (METAL SEAT & SOFT SEAT) BALL VALVES

Standard Specifications

Gain Competitive Edge with KOSO

KOSO is a leading industrial customized control valve manufacturer with strong in-house R&D capabilities. Committed to delivering high-quality, ISO-9001 certified valve systems, KOSO offers a wide range of products designed to meet evolving industry needs.

20
Plants Worldwide

For more information visit us at
www.koso.co.jp | www.koso.co.in

1M+
Valves Installed Worldwide

60+
Years of Experience

100,000+
Severe Service Valves Installed Worldwide

2
Wholly Owned Foundries In India & China

Table Of Content

Overview 4

Key Features & Benefits 4

Product Specifications 5

Standard Specification 6

Type Of HVOF Coatings Used 6

Body & Trim Sectional View Of 350W – Metal-Seated Floating Ball Valve 7

Body & Trim Sectional View Of 350W – Metal-Seated Trunnion Mounted Ball Valve 8

Body & Trim Sectional View Of 350K – Soft-Seated Floating Ball Valve 9

Body & Trim Sectional View Of 350K – Soft-Seated Trunnion Mounted Ball Valve 10

CV Table for 350 Series-Ball Valves Pressure Class 150#, 300#, 600#, 900#, 1500#, 2500# 11

P-T Curves for Soft Seated Material 11

Overview

KOSO 350 Series ball valve are a high performance, quarter-turn, floating as well as Trunnion Mounted (Internal type) ball valves, designed to suit a wide variety of applications. KOSO's Model 350 is divided into two types based on the seat ring used.

MODEL 350W: Metal Seated Ball Valve & 350K: Soft Seated Ball Valve.

KOSO manufactures a wide range of floating ball valves and trunnion-mounted ball valves in standard sizes up to 36", ASME classes #150 to #2500, in metal seated (350W) and soft seated (350K). Valves can be made available with multiple end connections, variety of materials and trim combinations.

Key Features & Benefits

Stem Blowout-Proof Design	Ball valves have a positive stem blowout-proof system. For trunnion valves, stem blowout is prevented by the gland plate and for floating valves, stem blowout is prevented by the split ring.
Fire Safe Design	350W series of metal-seated ball valves are inherently fire safe. The sealing contact between the ball and seat is metal-to-metal. In 350K series of soft seated Trunnion / Floating Ball Valves, if the soft insert gets damaged due to fire, the secondary sealing of metal-to metal contact between seat and ball helps to hold the leakage during an emergency. This secondary metal seal is a standard feature in 350K series. 350 Series ball valves are tested as per API 607 / API 6FA.
Anti-Static Device	An anti-static device is provided between: 1) Ball & Stem 2) Stem & Body A static charge can build-up on the ball due to friction between the ball and soft seat. This is a fire hazard if not removed. A spring-loaded ball is provided on the stem to ensure electrical conductivity between the ball and the body to allow these static charges to dissipate.
Self-Relieving Seat – Cavity Relief	For Trunnion mounted valve the seat maintains contact with the ball and body or end cap ensuring a tight seal. When the pressure of the entrapped fluid in the cavity area exceeds 1.33 times the rated. Pressure of the valve, the seat gets pushed away from the ball to relieve this cavity pressure. This prevents damage to the valve, due to over-pressurization inside valve cavity.
High Temperature & High Pressure	350W metal seated ball valve is suitable for several service applications with a high temperature and/or a high pressure. The ball and seat are hard coated with chrome carbide or tungsten carbide, which has a high erosion and abrasion resistance; manufactured using an in-house HVOF system. They are mate-lapped to ensure 100% sealing. The ball never leaves the seat and contaminants away. This self-cleaning action prevents the interference of and damage from contaminants. Therefore, this valve is suitable for slurry and abrasive service.

Internal Trunnion Design	Trunnion mounted with internal trunnion design helps to eliminate the leakage path and damage during handling
Tight Shut-off / Zero leakage valve	350K series ball valve has a resilient seat which provides a tight Shut-off / Zero leakage valve. This is best suited for ON-OFF service applications like controlling various types of fluids. Pressure-Temperature rating for seat material: P-T Curves represent maximum pressure-temperature rating for soft seat material. When selecting a soft seat material, the lower rating between valve body and seat should be considered. PTFE seat material has limitations in terms of high pressure and temperatures. PEEK is more suitable for high pressure and temperature applications.

Product specifications

Design Standard & Material Standard	• Valve design - API 6D, ASME B16.34, ISO 17292 and API 608 • Flange design - ASME B16.5 & ASME B16.47 • Butt weld end connection - ASME B16.25 • Socket weld end connection - ASME B16.11 • Material compliance to ASME, ASTM, EN or Custom standards
Industry Served	• Power, Oil & Gas • FPSO, Onshore, Offshore • LNG, Fertilizer, Steel • Refinery, Petrochemical
Quality Standard Compliance	• Quality Management System as per ISO 9001 • Quality Management System as per API Spec Q1 • PED/CE as per 2014/68/EU & ATEX 2014/34/EU
Type of Actuation	• Pneumatic Actuator • Hydraulic Actuator • Electrical Actuator • Lever/Wrench • Gear-Box
Key Applications	On-Off valves, Emergency Shutdown valves, Shut off Valves, Blowdown Valves, API 6D Valves, On off cryogenic valve, On off high temperature valve, Automated valve, Jacketed Valve, Valve with bypass, Valve with sealant Injector.
Certification	• IBR, SIL • PED/CE Marking, ATEX • CRN, TRCU • API (MONOGRAM)

Standard Specification

350K-Soft Seated Ball Valve / 350W Metal Seated Ball Valve Body & Trims

Series	350K-Soft Seated Ball Valve 350W Metal Seated Ball Valve
Valve Size	0.5 " - 36" (DN15 - DN 900) (For higher sizes, consult with factory)
Characteristics	On-Off
Trim Material & Treatment	Metal Seat & Soft Seat {Refer to below materials table}
Pressure Rating	ASME Class 150, 300, 600, 900, 1500, 2500 (Special consult with factory) (For EN Class or PN Class consult with factory)
End Connections	Flanged (RF, FF, RTJ) and Welded End
Face to Face Dimension	ASME 16.10 / API 6D, KOSO Standard, Special (Consult with design)
Body & End Cap Material	WCB, WCC, WC6, WC9, C5, C12A, LCC, LCB, CF8, CF8M,CF3M, CF8C,Duplex SS, Alloy 625, Alloy 825, Monel, Hastelloy C and Cladding on body internal is available upon request
NACE (as applicable)	NACE MR0175, NACE MR0103
Gland Packing	TFE V-ring, TFE carbon fiber, Grafoil and more
Gaskets	Spiral wound metal, with Grafoil or TFE filler
Leakage Class	API 6D / ISO 5208 / ANSI FCI 70-2 / API 598
Special Testing Requirements (Optional upon request)	Fugitive Emission Type Test -ISO 15848-1 & 2, Fire Safe Type test- API 607 / API 6FA, Cryogenic test as per ISO 28921, Cv test, High Pressure Test, Vacuum Test, Helium Leak Test
Marking	As per KOSO Standard practices / MSS-SP-25
Options	Forging Body/End Cap

Type Of HVOF Coatings Used:

TYPE	MATERIAL	HARDNESS	APPLICATION	TEMPERATURE RANGE	
				O-ring	Graphite seal
Cr	Chrome Carbide (75Cr3-C225Ni-Cr)	HV1100	Suitable for super-heated steam / High Hardness for high temperature		400 ° C to + 538° C
WcCr	Tungsten Chrome Carbide (73Wc-20Cr-7Ni)	HV1200	Suitable for all environment (Lower Hardness than Wc)	- 20° C to 180° C	- 45° C to 400 ° C
Wc	Tungsten Carbide (88Wc-12Co)	HV1400	Suitable for Slurry applications.	- 20 ° C to 180 ° C	- 45 ° C to 400 ° C
St	Stellite-6/Stellite-21	40~50 HRC	Suitable for erosion resistance / High chemical resistance	- 20 deg * C to 180 deg * C	- 45 ° C to 538 ° C

Body & Trim Sectional View

350W – Metal-Seated Floating Ball Valve

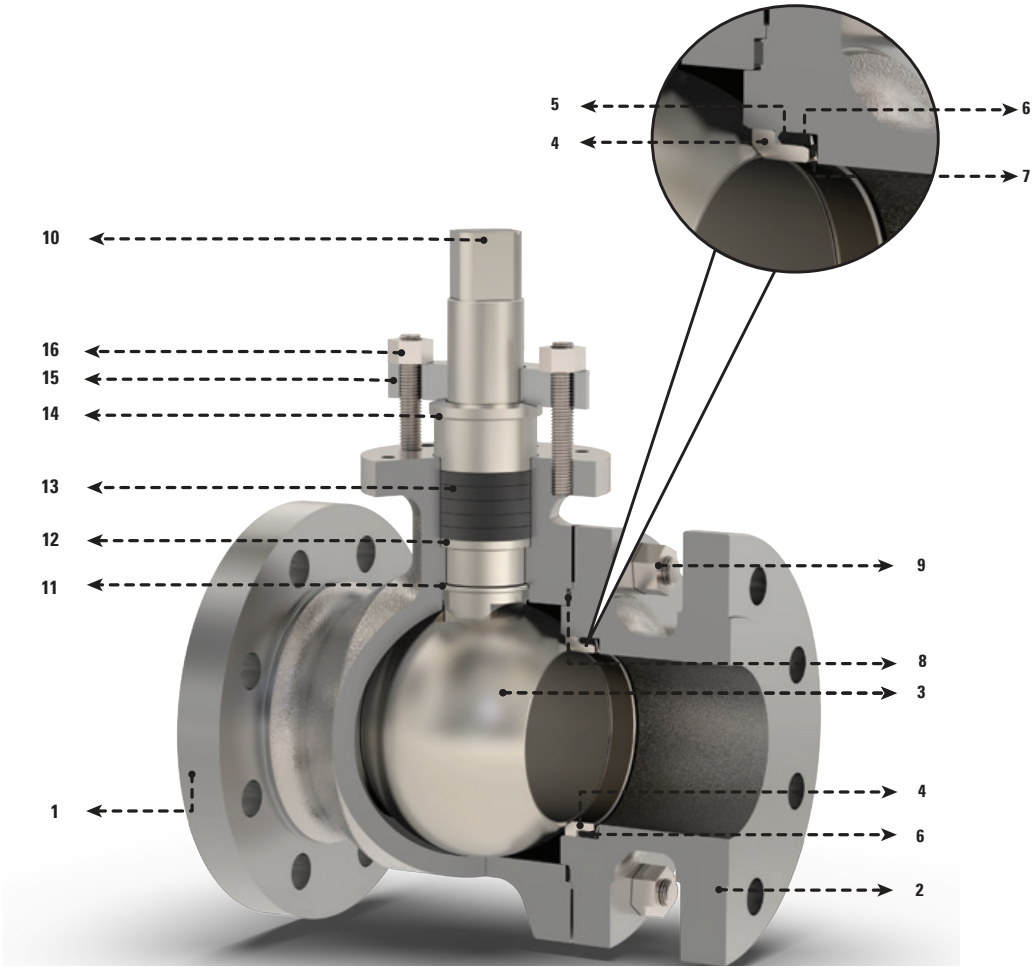

Figure 1: 350W – Metal-Seated Floating Ball Valve Sectional View

No.	Description	Material	No.	Description	Material
1	Body	A216-WCB / A351-CF8M / A351-CF3M / A351-CF8 / A352-LCB	9	Body Stud / Hex Nut	Alloy steel / Stainless Steel
2	End Cap	A216-WCB / A351-CF8M / A351-CF3M / A351-CF8 / A352-LCB	10	Stem	S32760 / 17-4 PH / SS 316 Inconel-718
3	Ball + HVOF Coating	SS316 / A351-CF8M / A351-CF8 + Cr / WcCr / Wc / Stellite	11	Split ring	SS 316
4	Seat Ring + HVOF Coating	SS316 / A351-CF8M / A351-CF8 + Cr / WcCr / Wc / Stellite	12	Packing Spacer	SS 316
5	Seat Back Seal	V-ring (Graphite)	13	Gland Packing	Graphite / PTFE
6	Seat Adaptor	SS 316	14	Gland Bush	SS 316
7	Spring	Inconel X-750 /Inconel-718	15	Gland Flange	SS 316
8	Body Gasket	SS316 + Spiral Wound Graphite / PTFE	16	Gland Stud / Hex Nut	Alloy steel / Stainless Steel

Body & Trim Sectional View

350W – Metal-Seated Trunnion Mounted Ball Valve

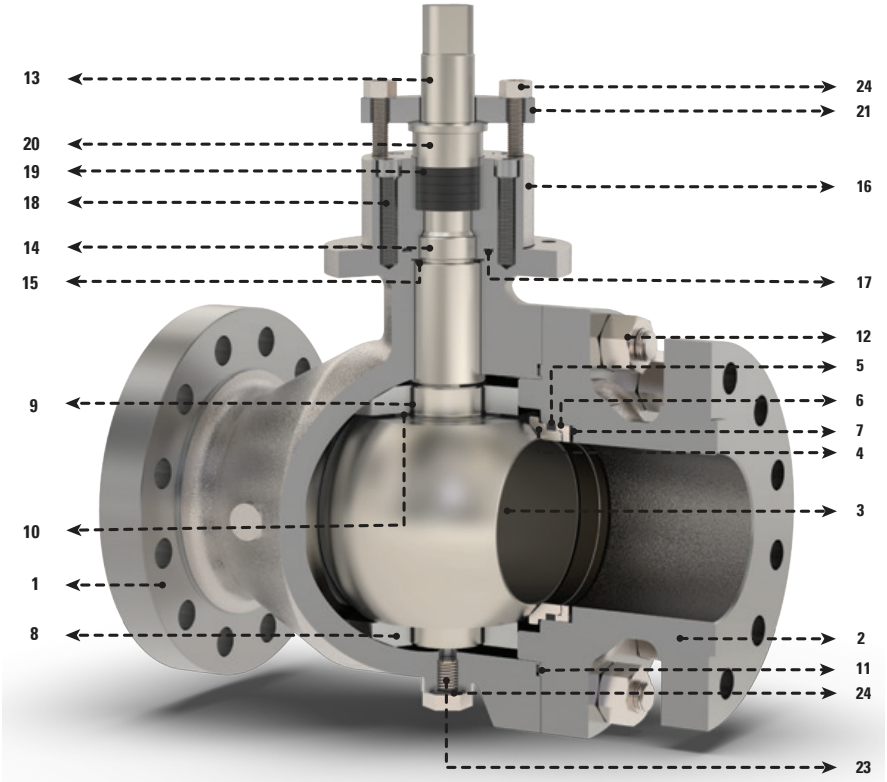

Figure 2: 350W – Metal-Seated Trunnion Mounted Ball Valve Sectional View

No.	Description	Material	No.	Description	Material
1	Body	A216-WCB / A351-CF8M / A351-CF3M / A351-CF8 / A352-LCB	13	Stem	S32760 / 17-4 PH / Inconel-718 / SS 316
2	End Cap	A216-WCB / A351-CF8M / A351-CF3M / A351-CF8 / A352-LCB	14	Stem Bearing	MU 316 / HT 316 / DFP- D2 / DFP-3 / DFP-4
3	Ball + HVOF Coating	SS316 / A351-CF8M / A351-CF8 + Cr / WcCr / Wc / Stellite	15	Stem Thrust Washer	MU 316 / HT 316 / DFP- D2 / DFP-3 / DFP-4
4	Seat Ring + HVOF Coating	SS316 / A351-CF8M / A351-CF8 + Cr / WcCr / Wc / Stellite	16	Gland Plate	SS 316
5	Seat Back Seal	V-ring (Graphite)	17	Gasket	SS316 + Spiral Wound Graphite / PTFE
6	Seat Adaptor	SS 316	18	Socket Cap Screw	Alloy steel / Stainless Steel
7	Spring	Inconel X-750 / Inconel- 718	19	Gland Packing	Graphite / PTFE
8	Trunnion Plate	SS 316	20	Gland Bush	SS 316
9	Trunnion Bearing	MU 316 / HT 316 / DFP-D2 / DFP-3 / DFP-4	21	Gland Flange	SS 316
10	Thrust Washer	MU 316 / HT 316 / DFP-D2 / DFP-3 / DFP-4	22	Gland Stud / Hex Nut	Alloy steel / Stainless Steel
11	Body Gasket	SS316 + Spiral Wound Graphite / PTFE	23	Drain Plug	SS 316
12	Body Stud / Hex Nut	Alloy steel / Stainless Steel	24	Drain Seal	Graphite / PTFE

Body & Trim Sectional View

350K – Soft-Seated Floating Ball Valve

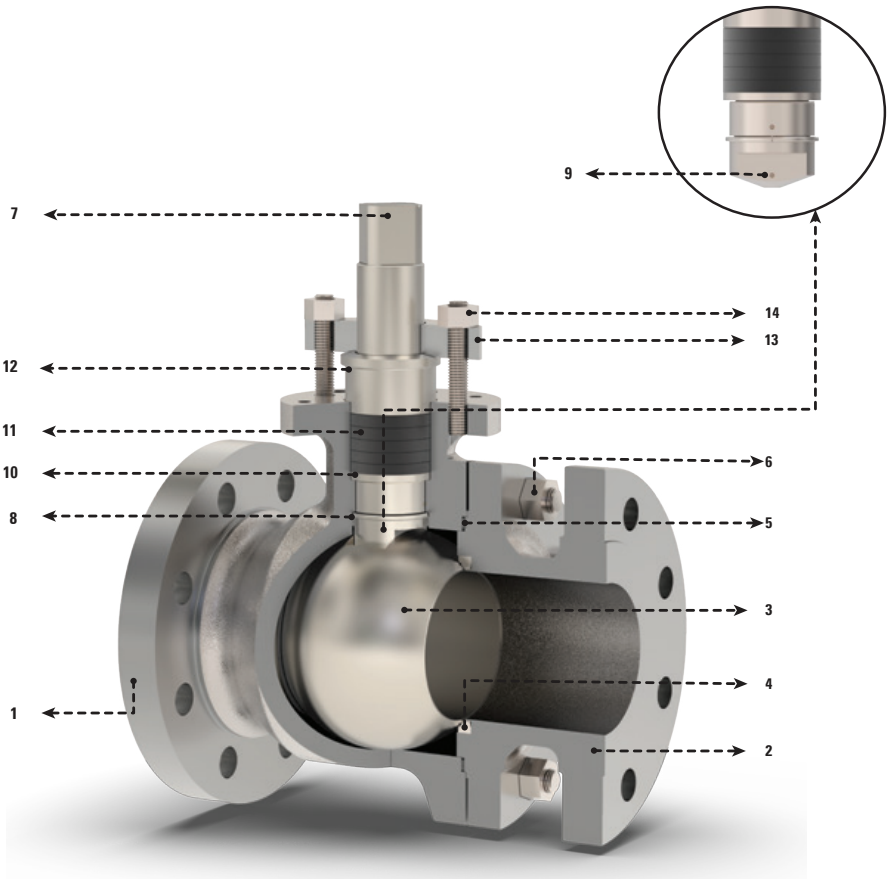

Figure 3: 350K – Soft-Seated Floating Ball Valve Sectional View

No.	Description	Material	No.	Description	Material
1	Body	A216-WCB / A351-CF8M / A351-CF3M / A351-CF8 / A352-LCB	8	Split ring	SS 316
2	End Cap	A216-WCB / A351-CF8M / A351-CF3M / A351-CF8 / A352-LCB	9	Anti-Static Device	SS 316
3	Ball	SS316 / A351-CF8M/ A351-CF8	10	Packing Spacer	SS 316
4	Seat Seal	PTFE / C-PTFE / PEEK / RPTFE / GFT	11	Gland Packing	Graphite / PTFE
5	Body Gasket	SS316 + Spiral Wound Graphite / Spiral Wound PTFE	12	Gland Bush	SS 316
6	Body Stud / Hex Nut	Alloy steel / Stainless Steel	13	Gland Flange	SS 316
7	Stem	S32760 / 17-4 PH / Inconel- 718 / SS316	14	Gland Stud / Hex Nut	Alloy steel / Stainless Steel

Body & Trim Sectional View

350K – Soft-Seated Trunnion Mounted Ball Valve

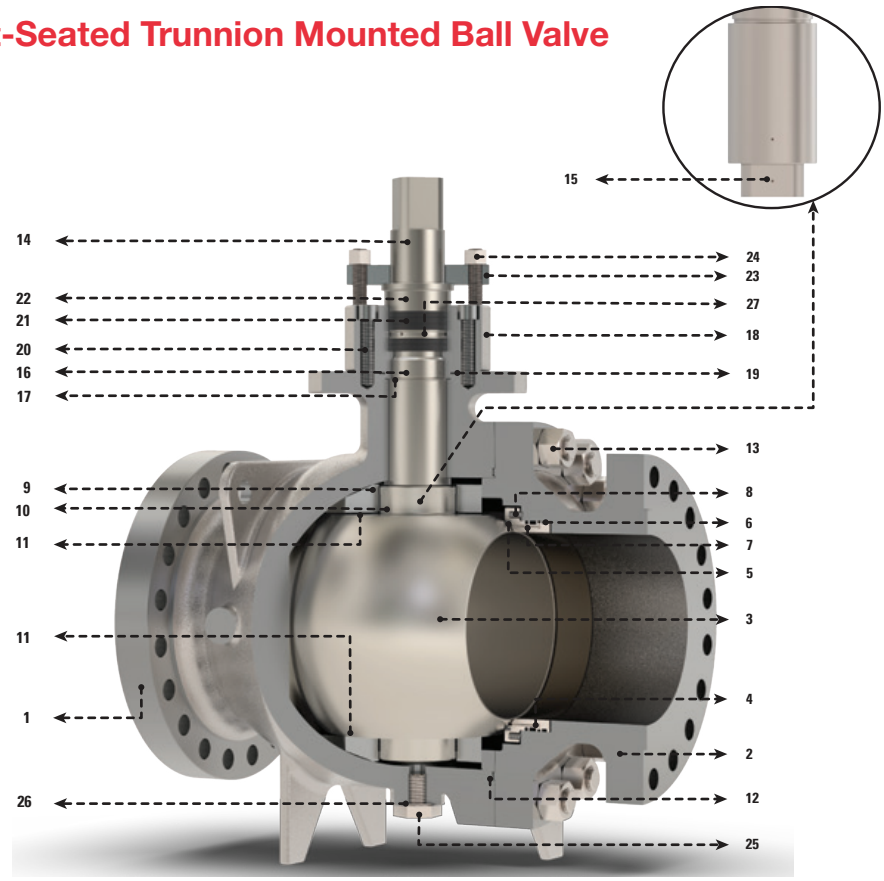

Figure 4: 350K – Soft-Seated Trunnion Mounted Ball Valve Sectional View

No.	Description	Material	No.	Description	Material
1	Body	A216-WCB / A351-CF8M / A351-CF3M / A351-CF8 / A352-LCB	14	Stem	S32760 / 17-4 PH / Inconel-718 / Graphite / PTFE
2	End Cap	A216-WCB / A351-CF8M / A351-CF3M / A351-CF8 / A352-LCB	15	Anti-Static Device	SS 316
3	Ball	SS316 / A351-CF8M/ A351-CF8	16	Stem Bearing	MU 316 / HT 316 / DFP-D2 / DFP-3 / DFP-4
4	Seat Holder	SS 316	17	Stem Thrust Washer	MU 316 / HT 316 / DFP-D2 / DFP-3 / DFP-4
5	Seat Seal	PTFE / C-PTFE / PEEK / RPTFE / GFT	123	Gland Plate	SS 316
6	O-ring	Viton / NBR	19	Gasket	SS316 + Spiral Wound Graphite / PTFE
7	Fire safe seal	Graphite	20	Socket Cap Screw	Alloy steel / Stainless Steel
8	Spring	Inconel X-750 / Inconel- 718	21	Gland Packing	Graphite / PTFE
9	Trunnion Plate	SS 316	22	Gland Bush	SS 316
10	Trunnion Bearing	MU 316 / HT 316 / DFP- D2 / DFP-3 / DFP-4	23	Gland Flange	SS 316
11	Thrust Washer	MU 316 / HT 316 / DFP- D2 / DFP-3 / DFP-4	24	Gland Stud / Hex Nut	Alloy steel / Stainless Steel
12	Body Gasket	SS316 + Spiral Wound Graphite	25	Drain Plug	SS 316
13	Body Stud / Hex Nut	Alloy steel / Stainless Steel	26	Drain Seal	Graphite / PTFE
			27	Latern ring	SS 316

CV Table for 350 Series-Ball Valves
Pressure Class 150#, 300#, 600#, 900#, 1500#, 2500#

Full Bore Ball Valve Cv Value						
Valve size, inch	#150	#300	#600	#900	#1500	#2500
1/2"	20	20	20			
3/4"	50	40	40			
1"	40	80	70	60	60	50
1-1/2"	230	220	190	170	170	150
2"	470	430	370	300	300	190
3"	1300	1100	1000	900	750	440
4"	2500	2200	1800	1700	1600	1000
6"	5500	5500	4600	4300	3600	2500
8"	11000	11000	9000	9000	7000	6000
10"	18000	17000	15000	14000	11000	9000
12"	27000	26000	23000	21000	17000	13000
14"	33000	31000	28000	24000	21000	
16"	44000	42000	38000	33000	27000	
18"	58000	56000	51000	45000		
20"	74000	71000	64000	56000		
24"	110000	110000	96000	83000		
26"	140000	130000	120000			
28"	160000	150000	140000			
30"	190000	180000	160000			
32"	230000	210000	190000			
34"	250000	240000	210000			
36"	290000	270000	230000			

P-T Curves for Soft Seated Material:-

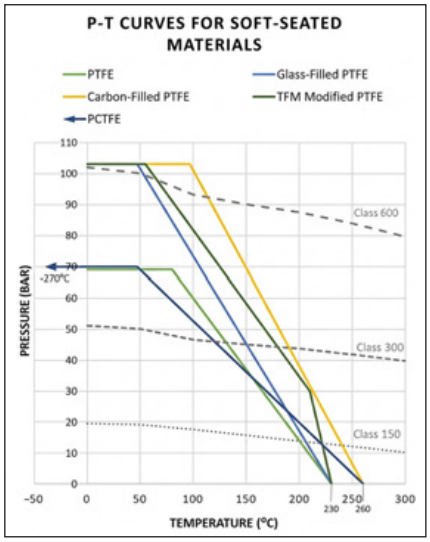

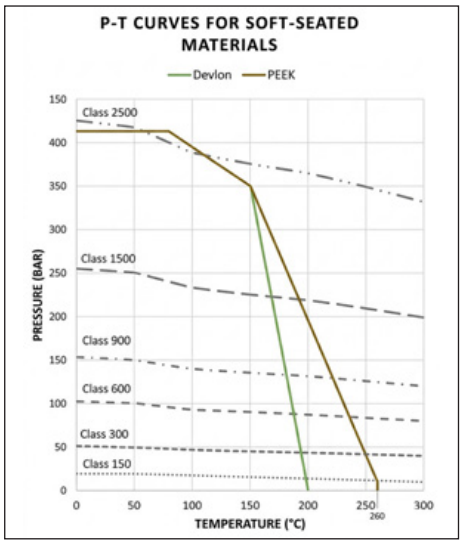

Figure 5: P-T Curves

Precision.
Innovation.
Trust.

NIHON KOSO CO.,Ltd.
1-16-7 Nihombashi, Chuo-ku, Tokyo, Japan | 103-0027 | +81-03-5202-4300
www.koso.co.jp

KOSO INDIA PRIVATE LIMITED
H-33 & 34, MIDC, Ambad, Nashik, Maharashtra, India | 422010 | +91-253-2408701
www.koso.co.in

WORLDWIDE LOCATIONS
Japan | United States of America | United Kingdom | India | South Korea | Singapore | Italy | Saudi Arabia | Oman | United Arab Emirates | China

KOSO

Our Creativity Is Our Pride

We reserve the right to technical improvements, changes and corrections. The information given in this document only contains general descriptions and / or performance features which may not always specifically reflect those described or which may undergo modification in the course of further development of products. The requested performance features are binding only when they are expressly agreed upon in the concluded contract.

©2026 KOSO all rights reserved

June 2026, Document number: 11S25E-00